THE NEXT GENERATION OF MINIMASTER

MINIMASTER® PLUS

THE SUCCESS CONTINUES

Seco continues the success of Minimaster by launching the next generation. Once again showing the future direction of end mills with replaceable fluted inserts.

"Minimaster Plus is reaching the highest level of precision and productivity."

SECO

MINIMASTER PLUS – PRECISE, FAST AND VERSATILE

SPEED? SURE!

When a used Minimaster Plus insert is replaced with a new one, the axial and radial position remain the same for maximum precision. It is also possible to replace the insert without removing the shank from the holder or machine and re-measuring the whole assembly, speeding up the process considerably.

COST EFFECTIVENESS? DEFINITELY.

You only pay for the replacement of the insert once it is worn out, instead of the complete tool (for example, HSS or solid end mill). Exchangeable inserts for different shanks allow for higher cutting data, thus avoiding regrinding and ensuring a consistent tool life.

WHAT'S IN IT FOR YOU?

- Increased productivity and precision
- Flexible mix of inserts and shanks
- Internal through coolant channels
- Two-, three- and multi-flute insert versions
- Excellent performance in all workpiece materials

INTERFACE PRECISION WILL SAVE YOU TIME

It is now no longer necessary to measure the setting length when using Minimaster. And due to the interface precision, the insert can be changed in the machine saving you time and increasing productivity.

THE RESULT

A replaceable carbide milling insert with an internal thread and an external taper. The shank has an internal taper with a threaded center pin plus a new feature; an axial stop. This keeps the position of the insert within the required tolerances.

THE FEATURES OF MINIMASTER PLUS

- Radial run-out within .0006" (15µm)
- Setting length variation when changing inserts within .001" (25µm)
- Long tool life plus flexibility
- High productivity and endless versatility

MINIMASTER PLUS COVERS MOST APPLICATIONS

THE MINIMASTER PLUS RANGE CONSISTS OF SEVERAL SHANK TYPES FOR EACH INSERT DIAMETER

This means that, regardless of the machining requirements, there is always a shank that gives the optimum combination of stability, accessibility and precision. The risk of vibration is also reduced, resulting in better surface finish, closer tolerances and better tool life.

HIGH PRECISION SHANKS

- 24 shank versions available
- Different length versions give optimized stability
- Different access length possibilities
- Manufactured with the latest technology to achieve the highest precision

MINIMASTER PLUS INSERTS AND GRADES

- Diameter range Ø.375-.625” and Ø10-16mm
- 2 grades allow for machining all materials while 2 geometries provide a smooth cutting design
- 2 to 8 flute insert range
- 2 and 3 flute inserts with internal through coolant channels to ensure accurate coolant application and efficient chip evacuation
- Corner radii range from .016” (0.4mm) up to .125” (3.1mm)

Square shoulder

- 3 and 4 flute inserts the first choice for slotting (4-flute in stable conditions).
- 5 and 8 flute inserts the first choice for contouring (not recommended for slotting).

Ball nose (3D milling)

- The 3 flute insert is the first choice.
- The 2 flute insert is the first choice in unstable conditions.

We strongly recommend using the new torque wrench to ensure correct torque value. Do not exceed recommended torque value from table on page 10. Minimaster® Plus features a precision taper face connection, excess torque will fracture the insert.

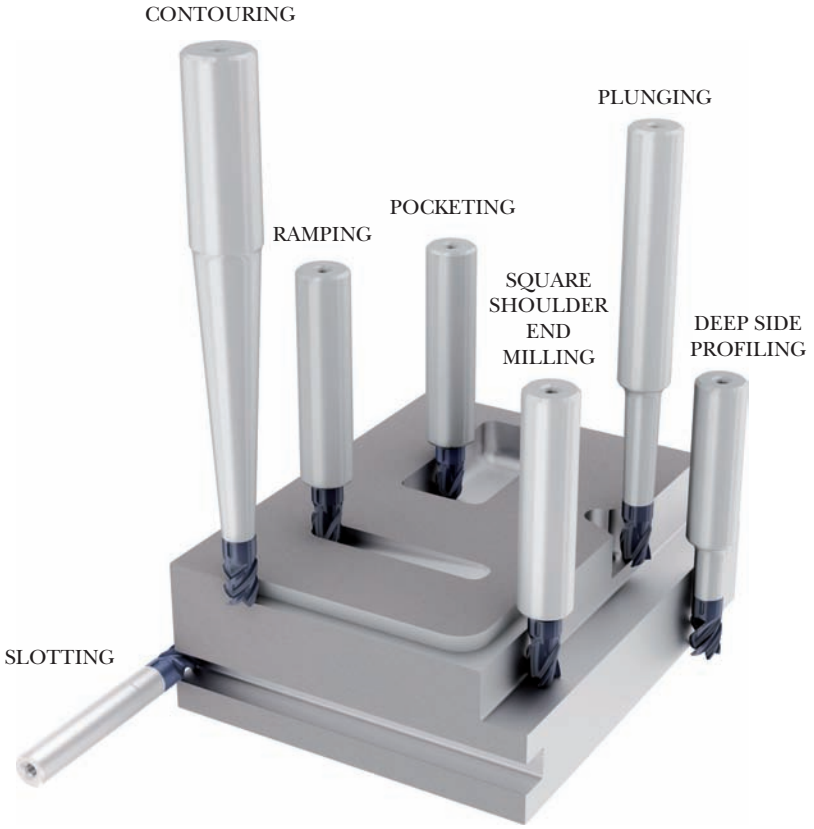

MP10 Steel shanks

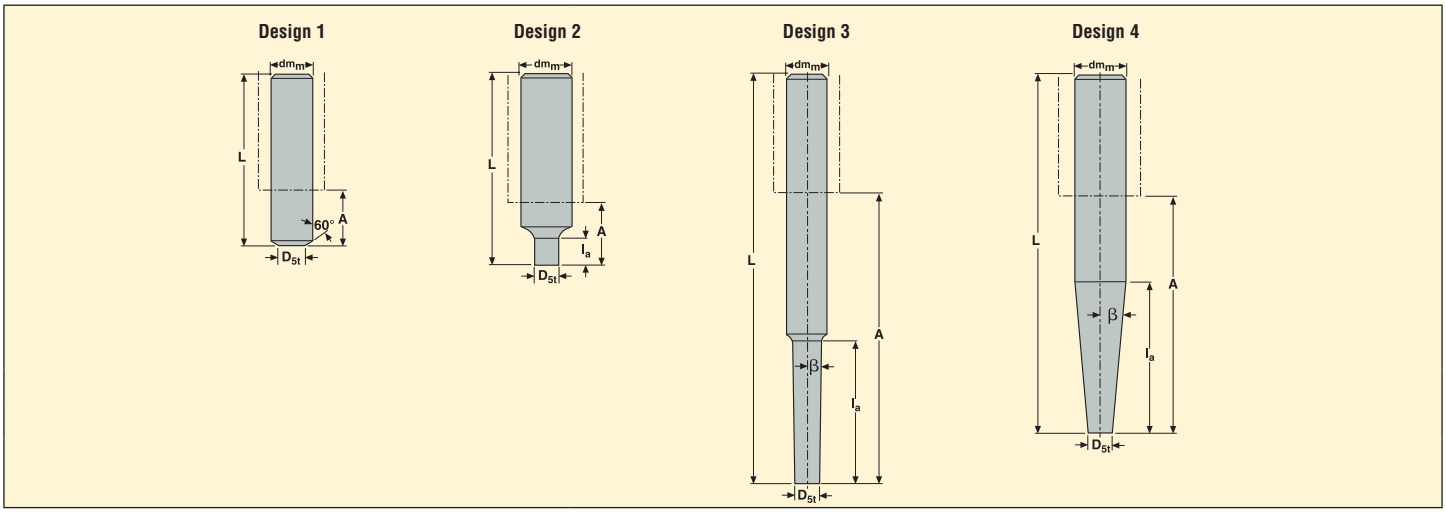

EDP	Part No.	Connecting size	Dimensions in inch/mm							Internal coolant	lbs
			D_{5t}	d_{mm}	L	A	l_a	β°	Design		
Inch shanks											
44988	**MP10-0622.6-0.00.60**	MP10	0.37	0.625	2.6	0.78	–	–	1	X	0.22
44989	**MP10-0372.1-0.39.00**	MP10	0.37	0.375	2.1	0.59	0.39	0	2	X	0.22
44990	**MP10-0622.8-0.59.00**	MP10	0.37	0.625	2.8	0.98	0.59	0	2	X	0.22
44992	**MP10-0624.6-1.37.01**	MP10	0.37	0.625	4.6	2.75	1.37	1	3	X	0.44
44993	**MP10-0626.2-2.36.01**	MP10	0.37	0.625	6.2	4.33	2.36	1	3	X	0.44
44994	**MP10-0753.9-1.80.03**	MP10	0.37	0.75	3.9	1.96	1.8	3	3	X	0.44
44995	**MP10-0755.5-3.40.03**	MP10	0.37	0.75	5.5	3.54	3.4	3	3	X	0.66
44996	**MP10-0755.5-3.54.05**	MP10	0.37	0.75	5.5	3.54	3.54	5	4	X	0.66
Metric shanks											
51268	**MP10-16068-0.6**	MP10	9.5	16	68	20	–	–	1	X	0.22
51271	**MP10-10055-10**	MP10	9.8	10	55	15	10	–	2	X	0.22
51281	**MP10-16073-15**	MP10	9.8	16	73	25	15	–	2	X	0.22
51291	**MP10-16118-35.01**	MP10	9.5	16	118	70	35	1	3	X	0.44
51293	**MP10-16158-60.01**	MP10	9.5	16	158	110	60	1	3	X	0.44
51294	**MP10-20100-45.03**	MP10	9.5	20	100	50	45	3	3	X	0.44
51295	**MP10-20140-85.03**	MP10	9.5	20	140	90	85	3	3	X	0.66
51296	**MP10-20140-90.05**	MP10	9.5	20	140	90	60	5	4	X	0.66

For inserts, see next page.

Spare parts, included in delivery.

Connecting size	Dynamomentic key*	Dynamomentic blade	Wrench	Torque values in/lbs	Torque values Nm
MP10 Inch shank	MP00-095.080	MP00-095	MD10-095	71	8.0
MP10 Metric shank	MP00-10.080	MP00-10	MP10-10	71	8.0

*Including blades

MP10 Square shoulder, ballnose design

Slotting and contouring

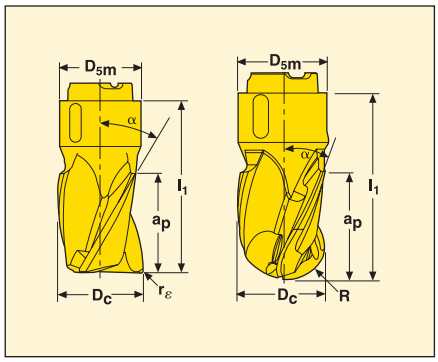

Inserts	EDP	Part No.	Dimensions in inch/mm D_c	r_ε	a_p*	D_{5m}	l_1	α°	z_c-value	Internal coolant	Grades F40M	MP3000
Inch inserts												
	67090	MP10-0.375R016Z3-E03	0.375	0.0157	0.472	0.37	0.826	20	3	X	■	
	45245	MP10-0.375R016Z3-M03	0.375	0.0157	0.472	0.37	0.826	30	3	X		■
	45246	MP10-0.375R032Z3-M03	0.375	0.0315	0.472	0.37	0.826	30	3	X		■
	67093	MP10-0.375R032Z3-E03	0.375	0.0315	0.472	0.37	0.826	30	3	X	■	
	45247	MP10-0.375R063Z3-E03	0.375	0.063	0.472	0.37	0.826	30	3	X	■	
	45248	MP10-0.375R122Z3-E03	0.375	0.122	0.472	0.37	0.826	30	3	X	■	
Metric inserts												
	51849	MP10-09812KWZ3-E03	9.8	0.3	12	9.6	21	30	3	X	■	
	51709	MP10-10012R04Z3-M03	10	0.4	12	9.6	21	30	3	X		■
	51710	MP10-10012R04Z3-E03	10	0.4	12	9.6	21	30	3	X	■	
	67049	MP10-10012R05Z3-E03	10	0.5	12	9.6	21	30	3	X	■	
	51711	MP10-10012R08Z3-M03	10	0.8	12	9.6	21	30	3	X		■
	51712	MP10-10012R08Z3-E03	10	0.8	12	9.6	21	30	3	X	■	
	51713	MP10-10012R12Z3-M03	10	1.2	12	9.6	21	30	3	X		■
	51716	MP10-10012R12Z3-E03	10	1.2	12	9.6	21	30	3	X	■	
	51719	MP10-10012R16Z3-E03	10	1.6	12	9.6	21	30	3	X	■	
	51722	MP10-10012R20Z3-E03	10	2	12	9.6	21	30	3	X	■	
	51727	MP10-10012R24Z3-E03	10	2.4	12	9.6	21	30	3	X	■	
	51728	MP10-10012R31Z3-E03	10	3.1	12	9.6	21	30	3	X	■	
Inch inserts												
	67091	MP10-0.375R016Z4-M02**	0.375	0.0157	0.472	0.37	0.826	50	4			■
	45262	MP10-0.375R016Z4-E02**	0.375	0.0157	0.472	0.37	0.826	50	4		■	
	67094	MP10-0.375R032Z4-M02**	0.375	0.0315	0.472	0.37	0.826	50	4			■
	45263	MP10-0.375R032Z4-E02**	0.375	0.0315	0.472	0.37	0.826	50	4		■	
Metric inserts												
	67050	-10012R04Z4-M02**	10	0.4	12	9.6	21	50	4			■
	51974	-10012R04Z4-E02**	10	0.4	12	9.6	21	50	4		■	
	67051	-10012R05Z4-E02**	10	0.5	12	9.6	21	50	4		■	
	67053	-10012R08Z4-M02**	10	0.8	12	9.6	21	50	4			■
	51975	-10012R08Z4-E02**	10	0.8	12	9.6	21	50	4		■	
	51976	-10012R12Z4-E02**	10	1.2	12	9.6	21	50	4		■	
	67054	-10012R12Z4-M02**	10	1.2	12	9.6	21	50	4			■
	67055	-10012R16Z4-E02**	10	1.6	12	9.6	21	50	4		■	
	67056	-10012R20Z4-E02**	10	2	12	9.6	21	50	4		■	
Inch inserts												
	67092	MP10 -0.375R016Z5-M02	0.375	0.0157	0.472	0.37	0.826	40	5			■
Metric inserts												
	67052	MP10-10012R04Z5-M02	10	0.4	12	9.6	21	40	5			■
Inch inserts, ballnose												
	45277	MP10-0.375B90Z2-M03	0.375	0.390	0.370	0.1875	0.740	20	2	X		■
	45293	MP10-0.375B90Z3-M03	0.375	0.472	0.370	0.1875	0.826	30	3	X		■
Metric inserts, ballnose												
	52048	MP10-10010B90Z2-M03	10	10	9.6	5.0	18.8	20	2	X		■
	52104	MP10-10012B90Z3-M03	10	12	9.6	5.0	21	30	3	X		■

*For max. slotting depth see table on page 10. **Slotting only in stable conditions.

4 & 5 flutes for contouring only.

MP12 Steel shanks

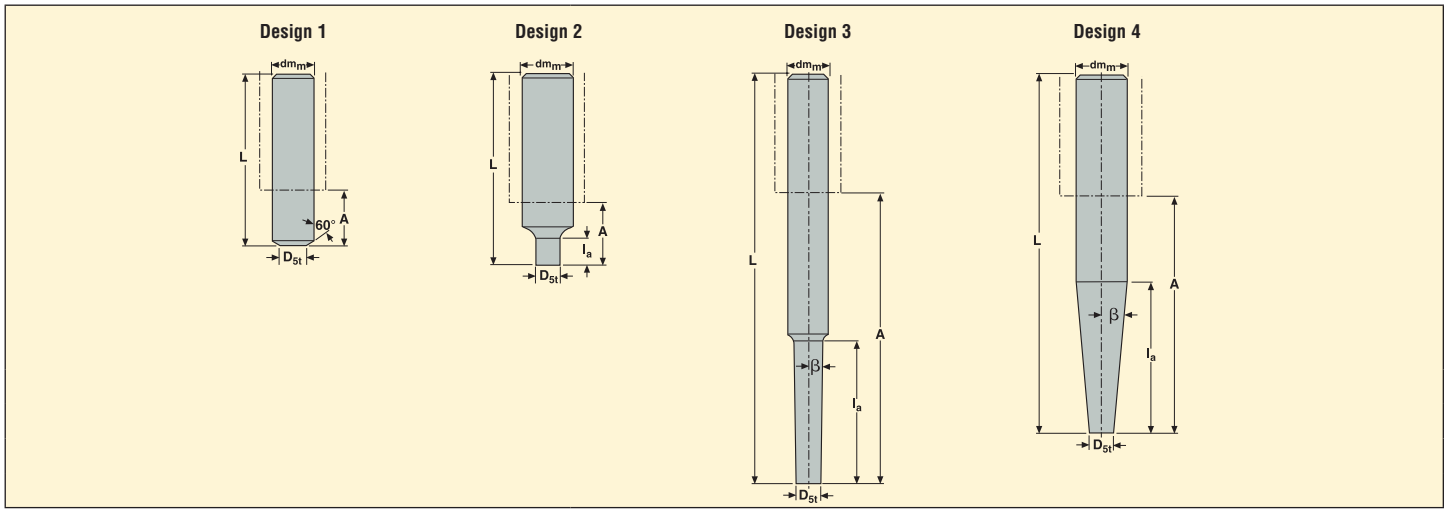

EDP	Part No.	Connecting size	Dimensions in inch/mm D_{5t}	d_{mm}	L	A	l_a	β°	Design	Internal coolant	lbs
Inch shanks											
44997	**MP12-0622.6-0.00.60**	MP12	0.45	0.625	2.6	0.78	–	–	1	X	0.22
44998	**MP12-0502.3-0.47.00**	MP12	0.45	0.500	2.3	0.59	0.47	0	2	X	0.22
44999	**MP12-0623.0-0.70.00**	MP12	0.45	0.625	3.0	1.18	0.70	0	2	X	0.22
45005	**MP12-0626.0-1.65.01**	MP12	0.45	0.625	6.0	4.13	1.65	1	3	X	0.44
45006	**MP12-0756.7-2.83.01**	MP12	0.45	0.750	6.7	4.72	2.83	1	3	X	0.66
45007	**MP12-0754.3-2.20.03**	MP12	0.45	0.750	4.3	2.36	2.20	3	3	X	0.44
45008	**MP12-0755.9-3.93.03**	MP12	0.45	0.750	5.9	3.93	3.93	3	4	X	0.66
45009	**MP12-0756.1-4.13.05**	MP12	0.45	0.750	6.1	4.13	4.13	5	4	X	0.66
Metric shanks											
51320	**MP12-16068-000.60**	MP12	11.5	16	68	20	–	–	1	X	0.22
51321	**MP12-12060-012.00**	MP12	11.5	12	60	15	12	–	2	X	0.22
51322	**MP12-16078-018.00**	MP12	11.5	16	78	30	18	–	2	X	0.22
51331	**MP12-16153-042.01**	MP12	11.5	16	153	105	42	1	3	X	0.44
51335	**MP12-20170-072.01**	MP12	11.5	20	170	120	72	1	3	X	0.66
51336	**MP12-20110-055.03**	MP12	11.5	20	110	60	55	3	3	X	0.44
51337	**MP12-20150-100.03**	MP12	11.5	20	150	100	81	3	4	X	0.66
51338	**MP12-20155-105.05**	MP12	11.5	20	155	105	48	5	4	X	0.66

For inserts, see next page.

Spare parts, included in delivery.

Connecting size	Dynamomentic key*	Dynamomentic blade	Wrench	Torque values in/lbs	Torque values Nm
MP12	MP00-12.120	MP00-12	MP12-12	106	12.0

*Including blades

MP12 Square shoulder, ballnose design

Slotting and contouring

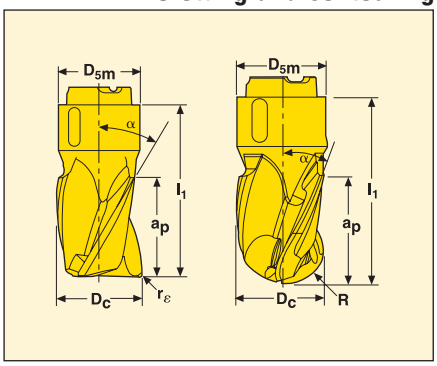

Inserts	EDP	Part No.	Dimensions in inch/mm D_c	r_ε	a_p*	D_{5m}	l_1	α°	z_c-value	Internal coolant	Grades F40M	MP3000
Inch inserts												
	45254	MP12-0.500R016Z3-M04	0.500	0.0157	0.551	0.454	0.945	30	3	X		■
	67095	MP12-0.500R016Z3-E04	0.500	0.0157	0.551	0.454	0.945	30	3	X	■	
	45255	MP12-0.500R032Z3-M04	0.500	0.0315	0.551	0.454	0.945	30	3	X		■
	67099	MP12-0.500R032Z3-E04	0.500	0.0315	0.551	0.454	0.945	30	3	X	■	
	45256	MP12-0.500R063Z3-E04	0.500	0.063	0.551	0.454	0.945	30	3	X	■	
	45257	MP12-0.500R122Z3-E04	0.500	0.122	0.551	0.454	0.945	30	3	X	■	
Metric inserts												
	51850	MP12-11714KWZ3-E04	11.7	0.3	14	11.5	24	30	3	X	■	
	51732	MP12-12014R04Z3-M04	12	0.4	14	11.5	24	30	3	X		■
	51733	MP12-12014R04Z3-E04	12	0.4	14	11.5	24	30	3	X	■	
	67057	MP12-12014R05Z3-E04	12	0.5	14	11.5	24	30	3	X	■	
	51734	MP12-12014R08Z3-M04	12	0.8	14	11.5	24	30	3	X		■
	51735	MP12-12014R08Z3-E04	12	0.8	14	11.5	24	30	3	X	■	
	51736	MP12-12014R12Z3-M04	12	1.2	14	11.5	24	30	3	X		■
	51737	MP12-12014R12Z3-E04	12	1.2	14	11.5	24	30	3	X	■	
	51738	MP12-12014R16Z3-E04	12	1.6	14	11.5	24	30	3	X	■	
	51739	MP12-12014R20Z3-E04	12	2.0	14	11.5	24	30	3	X	■	
	51740	MP12-12014R24Z3-E04	12	2.4	14	11.5	24	30	3	X	■	
	51741	MP12-12014R31Z3-E04	12	3.1	14	11.5	24	30	3	X	■	
Inch inserts												
	67096	MP12-0.500R016Z4-M03**	0.500	0.0157	0.551	0.454	0.945	50	4			■
	45265	MP12-0.500R016Z4-E03**	0.500	0.0157	0.551	0.454	0.945	50	4		■	
	67100	MP12-0.500R032Z4-M03**	0.500	0.0315	0.551	0.454	0.945	50	4			■
	45266	MP12-0.500R032Z4-E03**	0.500	0.0315	0.551	0.454	0.945	50	4		■	
Metric inserts												
	67058	MP12-12014R04Z4-M03**	12	0.4	14	11.5	24	50	4			■
	52030	MP12-12014R04Z4-E03**	12	0.4	14	11.5	24	50	4		■	
	67059	MP12-12014R05Z4-E03**	12	0.5	14	11.5	24	50	4		■	
	52031	MP12-12014R08Z4-E03**	12	0.8	14	11.5	24	50	4		■	
	67062	MP12-12014R08Z4-M03**	12	0.8	14	11.5	24	50	4			■
	52032	MP12-12014R12Z4-E03**	12	1.2	14	11.5	24	50	4		■	
	67063	MP12-12014R12Z4-M03**	12	1.2	14	11.5	24	50	4			■
	52033	MP12-12014R16Z4-E03**	12	1.6	14	11.5	24	50	4		■	
	67064	MP12-12014R20Z4-E03**	12	2.0	14	11.5	24	50	4		■	
	67065	MP12-12014R24Z4-E03**	12	2.4	14	11.5	24	50	4		■	
Inch inserts												
	67098	MP12-0.500R016Z6-M03	0.500	0.0157	0.551	0.454	0.945	40	6			■
Metric inserts												
	67061	MP12-12014R04Z6-M03	12	0.4	14	11.5	24	40	6			■
Inch inserts, ballnose												
	45281	MP12-0.500B90Z2-M04	0.500	0.472	0.454	0.250	0.858	20	2	X		■
	45297	MP12-0.500B90Z3-M04	0.500	0.551	0.454	0.250	0.945	30	3	X		■
Metric inserts, ballnose												
	52053	MP12-12012B90Z2-M04	12	12	11.5	6.0	21.8	20	2	X		■
	52110	MP12-12014B90Z3-M04	12	14	11.5	6.0	24	30	3	X		■

*For max. slotting depth see table on page 10. **Slotting only in stable conditions.

4 & 5 flutes for contouring only.

MP16 Steel shanks

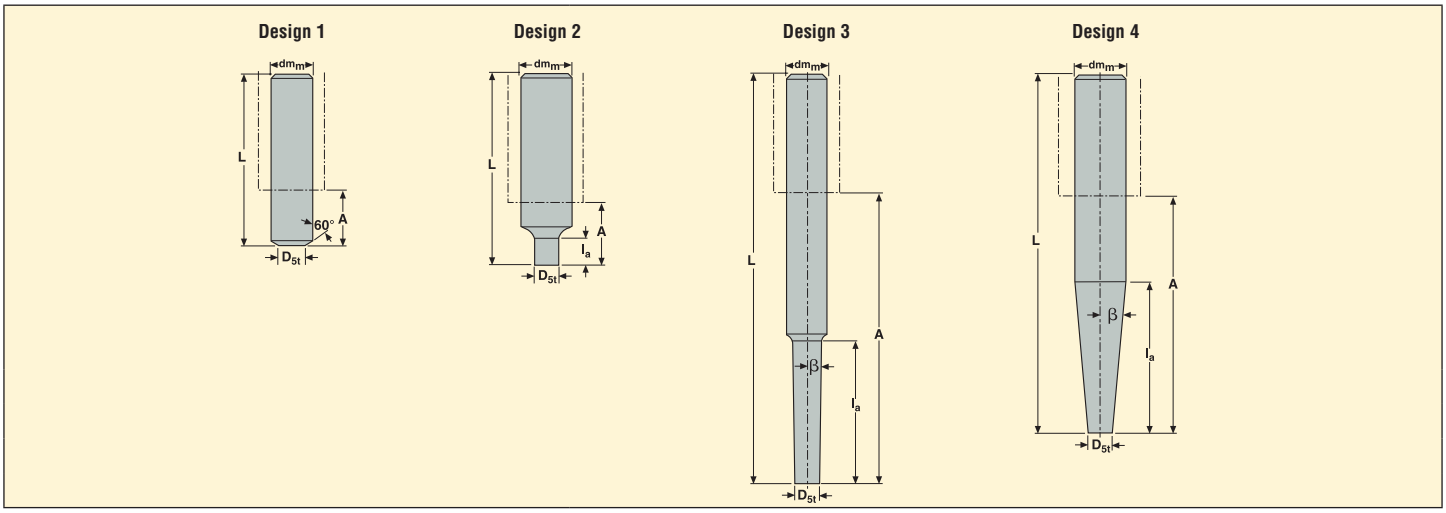

EDP	Part No.	Connecting size	Dimensions in inch/mm							Internal coolant	lbs
			D_{5t}	d_{mm}	L	A	l_a	β°	Design		
Inch shanks											
45010	**MP16-0752.7-0.00.60**	MP16	0.6	0.75	2.7	0.78	–	–	1	X	0.44
45011	**MP16-0622.6-0.63.00**	MP16	0.6	0.625	2.6	0.78	0.63	0	2	X	0.22
45012	**MP16-0753.5-0.94.00**	MP16	0.6	0.75	3.5	1.57	0.94	0	2	X	0.44
45014	**MP16-0757.5-2.20.01**	MP16	0.6	0.75	7.5	5.51	2.20	1	3	X	0.88
45015	**MP16-0757.7-3.74.01**	MP16	0.6	0.75	7.7	5.7	3.74	1	3	X	0.88
45016	**MP16-1005.3-3.00.03**	MP16	0.6	1.00	5.3	3.15	3.00	3	3	X	0.88
45017	**MP16-1007.1-4.92.03**	MP16	0.6	1.00	7.1	4.92	4.92	3	4	X	1.32
45019	**MP16-1007.1-4.92.05**	MP16	0.6	1.00	7.1	4.92	4.92	5	4	X	1.32
Metric shanks											
51344	**MP16-20070-000.60**	MP16	15.2	20	70	20	–	–	1	X	0.44
51345	**MP16-16068-016.00**	MP16	15.2	16	68	20	16	–	2	X	0.22
51346	**MP16-20090-024.00**	MP16	15.2	20	90	40	24	–	2	X	0.44
51348	**MP16-20190-056.01**	MP16	15.2	20	190	140	56	1	3	X	0.88
51349	**MP16-20195-095.01**	MP16	15.2	20	195	145	95	1	3	X	0.88
51350	**MP16-25136-075.03**	MP16	15.2	25	136	80	75	3	3	X	0.88
51351	**MP16-25181-125.03**	MP16	15.2	25	181	125	93	3	4	X	1.32
51354	**MP16-25181-125.05**	MP16	15.2	25	181	125	56	5	4	X	1.32

For inserts, see next page.

Spare parts, included in delivery.

Connecting size	Dynamomentic key*	Dynamomentic blade	Wrench	Torque values in/lbs	Torque values Nm
MP16	MP00-16.160	MP00-16	MP16-16	142	16.0

*Including blades

MP16 Square shoulder, ballnose design

Slotting and contouring

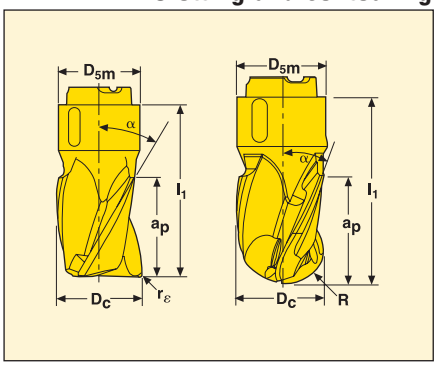

Inserts	EDP	Part No.	Dimensions in inch/mm D_c	r_ε	a_p*	D_{5m}	l_1	α°	z_c-value	Internal coolant	Grades F40M	MP3000
Inch inserts												
	45258	MP16-0.625R016Z3-M05	0.625	0.0157	0.748	0.606	1.283	30	3	X	■	
	67101	MP16-0.625R016Z3-E05	0.625	0.0157	0.748	0.606	1.283	30	3	X		■
	45259	MP16-0.625R032Z3-M05	0.625	0.0315	0.748	0.606	1.283	30	3	X	■	
	67105	MP16-0.625R032Z3-E05	0.625	0.0315	0.748	0.606	1.283	30	3	X		■
	45260	MP16-0.625R063Z3-E05	0.625	0.063	0.748	0.606	1.283	30	3	X	■	
	45261	MP16-0.625R122Z3-E05	0.625	0.122	0.748	0.606	1.283	30	3	X	■	
Metric inserts												
	67074	MP16-15719KWZ3-E05	15.7	0.3	19	15.4	32.6	30	3	X	■	
	51742	MP16-16019R04Z3-M05	16	0.4	19	15.4	32.6	30	3	X		■
	51744	MP16-16019R04Z3-E05	16	0.4	19	15.4	32.6	30	3	X	■	
	67066	MP16-16019R05Z3-E05	16	0.5	19	15.4	32.6	30	3	X	■	
	51751	MP16-16019R08Z3-M05	16	0.8	19	15.4	32.6	30	3	X		■
	51788	MP16-16019R08Z3-E05	16	0.8	19	15.4	32.6	30	3	X	■	
	51789	MP16-16019R12Z3-M05	16	1.2	19	15.4	32.6	30	3	X		■
	51790	MP16-16019R12Z3-E05	16	1.2	19	15.4	32.6	30	3	X	■	
	51792	MP16-16019R16Z3-E05	16	1.6	19	15.4	32.6	30	3	X	■	
	51793	MP16-16019R20Z3-E05	16	2.0	19	15.4	32.6	30	3	X	■	
	51794	MP16-16019R24Z3-E05	16	2.4	19	15.4	32.6	30	3	X	■	
	51796	MP16-16019R31Z3-E05	16	3.1	19	15.4	32.6	30	3	X	■	
Inch inserts												
	67102	MP16-0.625R016Z4-M04**	0.625	0.0157	0.748	0.606	1.283	50	4			■
	45269	MP16-0.625R016Z4-E04**	0.625	0.0157	0.748	0.606	1.283	50	4		■	
	67106	MP16-0.625R032Z4-M04**	0.625	0.0315	0.748	0.606	1.283	50	4			■
	45270	MP16-0.625R032Z4-E04**	0.625	0.0315	0.748	0.606	1.283	50	4		■	
Metric inserts												
	52036	MP16-16019R04Z4-E04**	16	0.4	19	15.4	32.6	50	4		■	
	67067	MP16-16019R04Z4-M04**	16	0.4	19	15.4	32.6	50	4			■
	67068	MP16-16019R05Z4-E04**	16	0.5	19	15.4	32.6	50	4		■	
	52037	MP16-16019R08Z4-E04**	16	0.8	19	15.4	32.6	50	4		■	
	67072	MP16-16019R08Z4-M04**	16	0.8	19	15.4	32.6	50	4			■
	52038	MP16-16019R12Z4-E04**	16	1.2	19	15.4	32.6	50	4		■	
	67073	MP16-16019R12Z4-M04**	16	1.2	19	15.4	32.6	50	4			■
	52039	MP16-16019R16Z4-E04**	16	1.6	19	15.4	32.6	50	4		■	
	52041	MP16-16019R20Z4-E04**	16	2.0	19	15.4	32.6	50	4		■	
	52042	MP16-16019R24Z4-E04**	16	2.4	19	15.4	32.6	50	4		■	
Inch inserts												
	45273	MP16-0.625R016Z6-M04	0.625	0.0157	0.748	0.606	1.283	40	6			■
	67104	MP16-0.625R016Z8-M04	0.625	0.0157	0.748	0.606	1.283	40	8			■
Metric inserts												
	67070	MP16-16019R04Z6-M04	16	0.4	19	15.4	32.6	40	6			■
	67071	MP16-16019R04Z8-M04	16	0.4	19	15.4	32.6	40	8			■
Inch inserts, ballnose												
	45284	MP16-0.625B90Z2-M05	0.625	0.3125	0.606	0.3125	1.161	20	2	X		■
	45300	MP16-0.625B90Z3-M05	0.625	0.3125	0.606	0.3125	1.283	30	3	X		■
Metric inserts, ballnose												
	52065	MP16-16016B90Z2-M05	16	16	15.4	8.0	29.5	20	2	X		■
	52116	MP16-16019B90Z3-M05	19	19	15.4	8.0	32.6	30	3	X		■

*For max. slotting depth see table on page 10. **Slotting only in stable conditions.

4 & 5 flutes for contouring only.

Cutting data - Slot milling

Seco Material Group	Cutting speed (sf/min)		MP10		MP12		MP16	
	MP3000	F40M	Feed in/tooth	Max depth of cut	Feed in/tooth	Max depth of cut	Feed in/tooth	Max depth of cut
1	**1035**	935	0.0016-0.0024	0.188	0.0020-0.0035	0.236	0.0024-0.0039	0.312
2	**920**	820	0.0016-0.0024	0.188	0.0020-0.0035	0.236	0.0024-0.0039	0.312
3	**770**	675	0.0012-0.0020	0.188	0.0016-0.0028	0.236	0.0024-0.0031	0.312
4	**705**	625	0.0012-0.0020	0.188	0.0016-0.0028	0.236	0.0024-0.0031	0.312
5	**575**	510	0.0012-0.0020	0.188	0.0016-0.0028	0.197	0.0024-0.0031	0.254
6	**460**	360	0.0012-0.0020	0.150	0.0016-0.0028	0.177	0.0024-0.0031	0.234
7	**165**	115	0.0012-0.0020	0.075	0.0016-0.0024	0.118	0.0020-0.0028	0.156
8	510	**475**	0.0012-0.0020	0.188	0.0016-0.0028	0.236	0.0024-0.0039	0.312
9	460	**445**	0.0012-0.0020	0.188	0.0016-0.0024	0.236	0.0024-0.0031	0.312
10	395	**375**	0.0012-0.0020	0.150	0.0016-0.0024	0.177	0.0024-0.0031	0.234
11	310	**295**	0.0012-0.0020	0.150	0.0016-0.0024	0.177	0.0024-0.0031	0.234
12	**720**	675	0.0012-0.0024	0.188	0.0020-0.0035	0.236	0.0024-0.0039	0.312
13	**640**	605	0.0012-0.0020	0.188	0.0016-0.0028	0.236	0.0024-0.0031	0.312
14	**590**	575	0.0012-0.0020	0.188	0.0016-0.0028	0.236	0.0024-0.0031	0.312
15	**475**	460	0.0012-0.0020	0.188	0.0016-0.0024	0.236	0.0024-0.0031	0.312
16	**2955**	2790	0.0016-0.0031	0.188	0.0020-0.0035	0.236	0.0024-0.0047	0.312
17	**2460**	2295	0.0016-0.0031	0.188	0.0020-0.0035	0.236	0.0024-0.0047	0.312
20	**195**	180	0.0012-0.0020	0.113	0.0012-0.0024	0.138	0.0016-0.0031	0.176
21	**115**	100	0.0012-0.0020	0.075	0.0012-0.0024	0.098	0.0016-0.0031	0.137
22	215	**195**	0.0012-0.0020	0.113	0.0012-0.0024	0.138	0.0016-0.0031	0.176

Bold figures represent first choice in each material group

Cutting data - Side milling (κ=90°)

Operation	a_e/D_c	Recommended feed per tooth (inch)			Max depth of cut	Speed factor
Full engagement	100%	0.0012	0.0020	0.0031	See table above	1.0
Side milling	25%	0.0031	0.0039	0.0047	0.75 x Dc	1.3
	10%	0.0051	0.0063	0.0075	1.2 x Dc	1.5
	5%	0.0071	0.0087	0.0106	1.2 x Dc	1.6
Average chip thickness (hm)		0.0008	0.0016	0.0020		

Drilling - parameters

MP size	Max depth (a_e = 100%)	Feed (in/rev)
MP10	0.295*	0.0016
MP12	0.354*	0.0020
MP16	0.472*	0.0025

*Peck drilling cycle required

Plunging - parameters

Diameter Ø (mm)	Max radial step (inch)	Feed (in/tooth)
10	0.118	0.0016
12	0.138	0.0020
16	0.189	0.0024

Minimaster®Plus Max RPM and Torque values

Cutter	Torque values (in/lbs)	Torque values (Nm)	Max RPM
MP10 -Steel shank	71	8	80000
MP12 -Steel shank	106	12	72700
MP16 -Steel shank	142	16	63600

- Normally there is no need for balancing tools for RPM up to 10 000.
- We strongly recommend using the new torque wrench to ensure correct torque value. Do not exceed recommended torque value from table. Minimaster® Plus features a precision taper face connection, excess torque will fracture the insert.

Over 10 000 RPM:
We recommend balancing of tool and toolholders at least separately.

Over 20 000 RPM:
Both tool and toolholders must be balanced at least separately.

Over 30 000 RPM:
Tool and tool holders must be balanced as a unit.
The max RPM in the tables should never be exceeded.

Cutting data - Copy milling

$a_e/D_c \leq 100\%$

Seco Material Group	Cutting speed (sf/min)	MP10		MP12		MP16	
	MP3000	Feed in/tooth	Max depth of cut	Feed in/tooth	Max depth of cut	Feed in/tooth	Max depth of cut
1	1035	0.0028-0.0039	0.188	0.0035-0.0047	0.236	0.0039-0.0047	0.312
2	920	0.0028-0.0039	0.188	0.0035-0.0047	0.236	0.0039-0.0047	0.312
3	770	0.0024-0.0031	0.188	0.0031-0.0039	0.236	0.0039-0.0047	0.312
4	705	0.0024-0.0031	0.188	0.0031-0.0039	0.236	0.0039-0.0047	0.312
5	575	0.0024-0.0031	0.188	0.0031-0.0039	0.197	0.0039-0.0047	0.254
6	460	0.0024-0.0031	0.150	0.0031-0.0039	0.177	0.0039-0.0047	0.234
7	165	0.0024-0.0031	0.075	0.0031-0.0039	0.118	0.0039-0.0047	0.156
8	510	0.0024-0.0031	0.188	0.0031-0.0039	0.236	0.0039-0.0047	0.312
9	460	0.0024-0.0031	0.188	0.0031-0.0039	0.236	0.0039-0.0047	0.312
10	395	0.0024-0.0031	0.150	0.0031-0.0039	0.177	0.0039-0.0047	0.234
11	310	0.0024-0.0031	0.150	0.0031-0.0039	0.177	0.0039-0.0047	0.234
12	720	0.0024-0.0031	0.188	0.0031-0.0039	0.236	0.0039-0.0047	0.312
13	640	0.0024-0.0031	0.188	0.0031-0.0039	0.236	0.0039-0.0047	0.312
14	590	0.0024-0.0031	0.188	0.0031-0.0039	0.236	0.0039-0.0047	0.312
15	475	0.0024-0.0031	0.188	0.0028-0.0035	0.236	0.0031-0.0039	0.312
16	2955	0.0016-0.0031	0.188	0.0039-0.0047	0.236	0.0039-0.0055	0.312
17	2460	0.0016-0.0031	0.188	0.0039-0.0047	0.236	0.0039-0.0055	0.312
20	195	0.0024-0.0031	0.113	0.0028-0.0039	0.138	0.0035-0.0047	0.176
21	115	0.0024-0.0031	0.075	0.0028-0.0039	0.098	0.0035-0.0047	0.137
22	215	0.0024-0.0031	0.113	0.0028-0.0039	0.138	0.0035-0.0047	0.176

Feed selection

Roughing application						
	Working diameter D_w			a_e/D_c		
				20%	40%	100%
D.O.C. a_p (inch)	MP10	MP12	MP16	Feed recommendations f_z (in/tooth)		
0.315	–	–	1.00 x D_c	0.0063	0.0055	0.0039
0.236	–	1 x Dc	0.94 x D_c	0.0063-0.0079	0.0039-0.0055	0.0039-0.0047
0.197	1 x D_c	0.97 x D_c	0.90 x D_c	0.0047-0.0098	0.0031-0.0075	0.0024-0.0055
0.157	0.96 x D_c	0.94 x D_c	0.83 x D_c	0.0055-0.0098	0.0039-0.0075	0.0039-0.0075
0.118	0.92 x D_c	0.87 x D_c	0.75 x D_c	0.0059-0.0118	0.0047-0.0098	0.0039-0.0098
0.079	0.80 x D_c	0.75 x D_c	0.63 x D_c	0.0067-0.0118	0.0051-0.0098	0.0051-0.0098
0.039	0.60 x D_c	0.55 x D_c	0.46 x D_c	0.0079-0.0138	0.0067-0.0138	0.0067-0.0138
Speed factor				1.30 x V_c	1.20 x V_c	1.00 x V_c

Feed selection

Finishing application						
	Working diameter D_w			a_e/D_c Profile Height, H (inch)		
				2%	5%	10%
D.O.C. a_p (inch)	MP10	MP12	MP16	Feed recommendations f_z (in/tooth)		
0.059	0.70 x D_c	0.66 x D_c	0.55 x D_c	0.0047 - 0.0071	0.0079 - 0.0118	0.0059 - 0.0098
0.039	0.60 x D_c	0.55 x D_c	0.46 x D_c			
0.024	0.47 x D_c	0.43 x D_c	0.36 x D_c	0.0039 - 0.0063	0.0098 - 0.0138	0.0071 - 0.0118
0.016	0.38 x D_c	0.35 x D_c	0.29 x D_c			
0.008	0.26 x D_c	0.24 x D_c	0.21 x D_c	0.0031 - 0.0055	0.0079 - 0.0118	0.0098 - 0.0157
0.004	0.20 x D_c	0.18 x D_c	0.15 x D_c			
Speed factor				1.60 x Vc	1.40 x Vc	1.30 x Vc

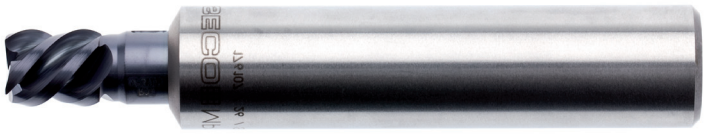

ARGENTINA Seco Tools Argentina S.A. Tel: +54 11 48 92 00 60 Fax: +54 11 47 23 86 00. **AUSTRALIA** Seco Tools Australia Pty. Ltd. Tel: +61 2 96 76 22 79 (local tel: 1300 55 7326) Fax: +61 2 96 76 61 58 (local fax: 1300 65 7326). **AUSTRIA** Seco Tools Ges.m.b.H Tel: +43 2253 210 40 Fax: +43 2253 210 4011. **BELARUS** Seco Tools Repoffice Tel: +375 17218 11 69 Fax: +375 17 218 11 68. **BELGIUM** Seco Tools Benelux N.V./S.A. Tel: +32 2 389 09 60 Fax: +32 2 389 09 89. **BOSNIA** See Solvenia. **BRAZIL** Seco Tools Ind. e Com. Ltda. Tel: +55 15 2101 86 00 Fax: +55 15 2101 8605. **BULGARIA** See Sweden. **CANADA** Seco Tools Canada Inc. Tel: +1 905 693 1780 Fax: +1 905 693 1788. **CHINA** Seco Tools (Shanghai) Co., Ltd. Tel: +86 21 54 26 55 00 Fax: +86 21 64 85 56 85. **COLOMBIA** Rexco Tools Tel: +57 1 269 5444 Fax: +57 1 269 2395. **CROATIA** See Slovenia. **CZECH REPUBLIC** Seco Tools CZ s.r.o. Tel: +420 530 500 811 Fax: +420 530 500 810. **DENMARK** Seco Tools A/S Tel: +45 43 44 7600 Fax: +45 43 44 5030. **FINLAND** Seco Tools OY Tel: +358 09 2511 7200 Fax: +358 09 2511 7201. **FRANCE** Seco Tools France S.A. Tel: +33 2 48 67 27 27 Fax: +33 2 48 67 27 05, Seco EPB Tel: +33 3 88 71 38 89 Fax: +33 3 88 70 98 98, Seco Ets. Planche S.A. Tel: +33 4 74 83 26 54 Fax: +33 4 74 83 26 59. **GERMANY** Seco Tools GmbH Tel: +49 211 240 10 Fax: +49 211 240 12 75. **GREECE** Athens Mechanica Tel: +30 210 523 1284/5 Fax: +30 210 523 1286. **HUNGARY** Seco Tools KFT. Tel: +36 1 267 6720 Fax: +36 1 267 6721. **INDIA** Seco Tools India (P) Ltd. Tel: +91 21 3766 7300 Fax: +91 21 3766 7410. **INDONESIA** Seco Tools (SEA) Pte Ltd. Tel: +62 21 7918 6441/6442 Fax: +62 21 7918 6440. **ITALY** Seco Tools Italia S.p.A. Tel: +39 031 97 81 11 Fax: +39 031 97 85 91 (local fax: 840 000938). **JAPAN** Seco Tools Japan K.K. Tel: +81 3 37 33 81 11 Fax: +81 3 37 33 81 25. **MACEDONIA** See Slovenia. **MALAYSIA** Seco Tools Malaysia SDN. BHD Tel: +60 3 9059 1833 Fax: +60 3 9059 4833. **MEXICO** Seco Tools de Mexico Tel/Fax: +52 818 350 6311. **MONTENEGRO** See Slovenia. **NETHERLANDS** Seco Tools Benelux N.V. Tel: +31 183 63 66 00 Fax: +31 183 66 06 01, Seco Jabro Tools b.v. Tel: +31 77 463 24 44 Fax: +31 77 463 14 54. **NEW ZEALAND** Seco Tools New Zealand Ltd. Tel: +64 9 415 8441 Fax: + 64 9 415 8442. **NORWAY** Seco Tools A/S Tel: +47 67 92 73 00 Fax: +47 67 92 73 02. **PHILIPPINES** See Singapore. **POLAND** Seco Tools (Poland) Sp. z.o.o. Tel: +48 22 637 5383 Fax: +48 22 637 5384. **PORTUGAL** Seco Tools Portugal, Lda. Tel: +351 256 371 650 Fax: +351 256 371 659. **ROMANIA** Seco Tools Romania S.R.L. Tel: +40 268 414 723 Fax: +40 268 476 772. **RUSSIA** Seco Tools Russia Tel: +7 495 680 1322 Fax: +7 495 680 6241. **SERBIA** Seco Tools SRB d.o.o Tel: +381 21 527 087 Fax: +381 21 527 093. **SINGAPORE** Seco Tools (SEA) Pte. Ltd. Tel: +65 68 41 28 02 Fax: +65 68 41 28 01. **SLOVAKIA** Seco Tools SK s.r.o. Tel: +421 33 551 3537 Fax: +421 33 551 3538. **SLOVENIA** Seco Tools SI d.o.o. Tel: +386 2 450 2340 Fax: +386 2 450 2341. **SOUTH AFRICA** Seco Tools South Africa (Pty.) Ltd. Tel: +27 11 362 2660 Fax: +27 11 362 1893. **SOUTH KOREA** Seco Tools Korea Ltd. Tel: +82 41 622 9785 Fax: +82 41 622 0985. **SPAIN** Seco Tools España S.A. Tel: +34 93 474 5533 Fax: +34 93 474 5550. **SWEDEN** Seco Tools AB Tel: +46 223 400 00 Fax: +46 223 718 60. **SWITZERLAND** Seco Tools AG Tel: +41 32 332 78 78 Fax: +41 32 332 78 79. **TAIWAN** Seco Tools (SEA) Taiwan Tel: +886 2 26 57 79 18 Fax: +886 2 26 57 94 61. **THAILAND** Seco Tools (Thailand) Co. Ltd. Tel: +66 2 74 67 801 Fax: +66 2 74 67 802. **TURKEY** Seco Tools A.S. Tel: +90 216 569 74 00 Fax: +90 216 575 73 83. **UKRAINE** Seco Tools Ukraine Tel: +38 056 790 05 44 Fax: +38 056 790 05 43. **UNITED KINGDOM** Seco Tools (U.K.) Ltd. Tel: +44 1789 76 43 41 Fax: +44 1789 76 11 70. **USA** Seco Tools Inc. Tel: +1 248 528 5200 Fax: +1 248 528 5250. **VIETNAM** Seco Tools (SEA) Pte. Ltd. Tel: +84 8 391 44 393/391 43 164 Fax: +84 8 391 43 164.

To find an Authorized SECO Distributor near you, please refer to the Distributor Locator on our website:
www.secotools.com

For technical assistance, call: **1-800-832-8326**

2805 Bellingham Drive, Troy, MI 48083

P-1104-5000

GT11-101

Copyright © 2011 Seco Tools Inc.

Printed in USA. All rights reserved.